© COPYRIGHT 1993/2004 by RF-232.
All rights reserved. No part of this circuit may be used or reproduced in any form or by any means, or stored in a data-base or retreival system, without prior written permission of RF-232.
TEL: (514)761-4201
http://www.micronator.ORG

MICRONATOR V:6.00

http://www.micronator.com

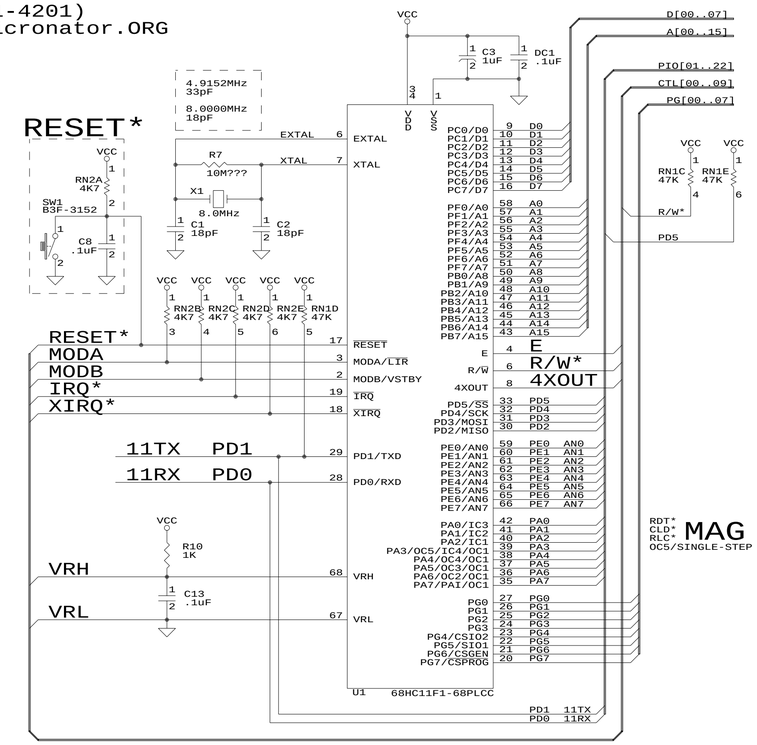

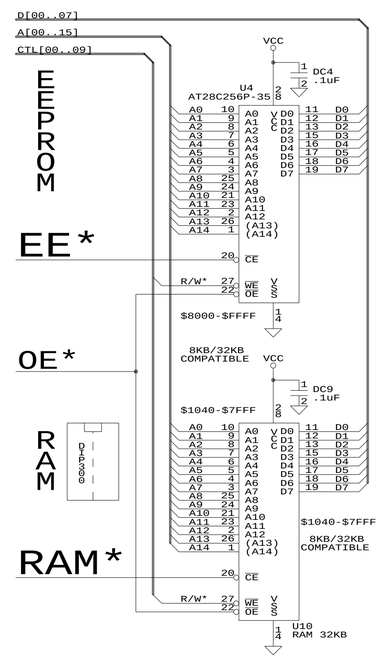

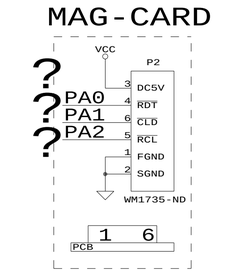

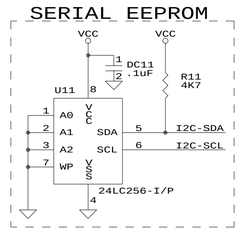

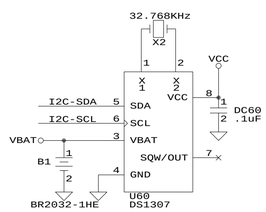

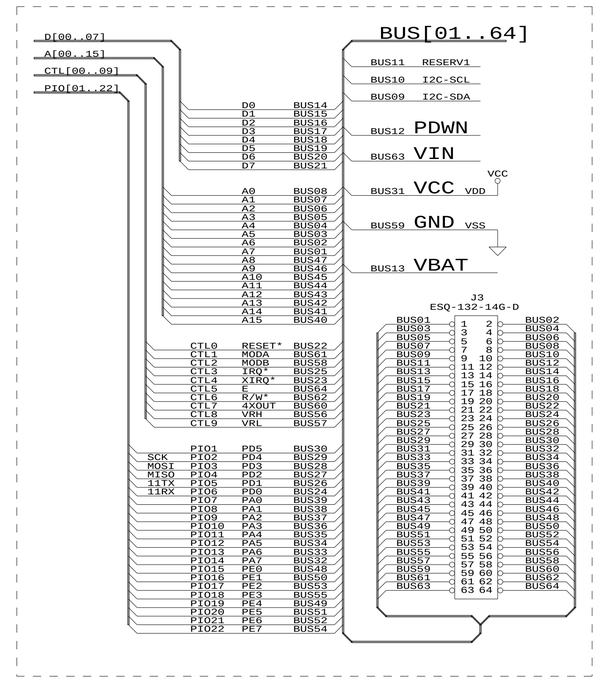

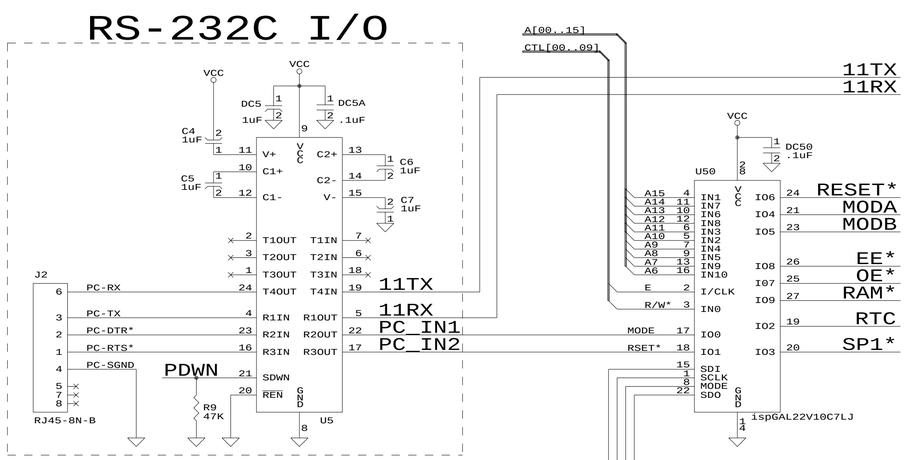

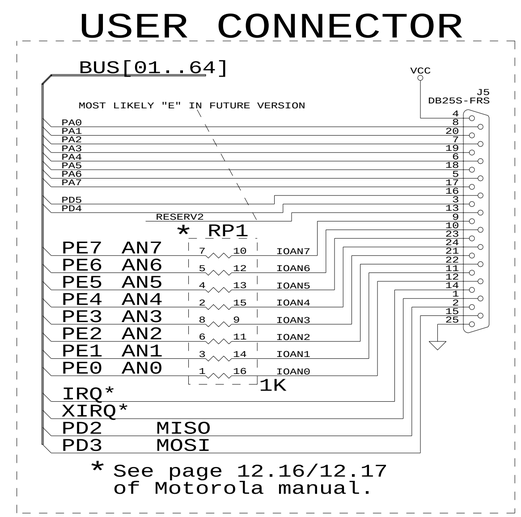

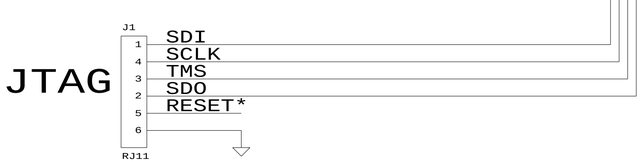

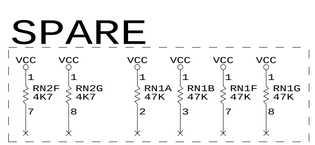

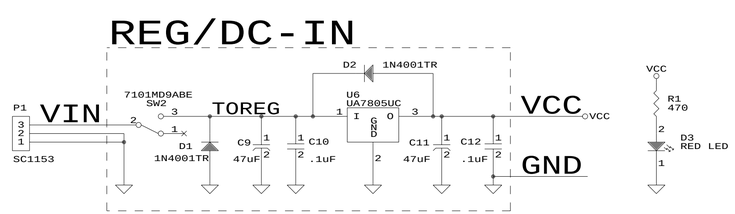

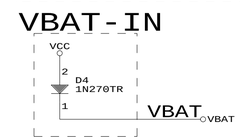

29.0" x 18.0"

15 NOVEMBRE 2001 @ 09:38EST

RF-232 (MICHEL-ANDRE ROBILLARD MCNE, PSS)
http://www.micronator.ORG
1404, RUE GALT
MONTREAL QC. H4E 1H9
TEL: (514) 761-4201

Title		
MICRONATOR V:6.00		
Size C	Document Number C:\...\V600\V600.SCH	REV 1.4
Date: April 11, 2004	Sheet 1 of 1	